REVISIONS				
LTR	DESCRIPTION	E.C.N.	DATE	BY/APP'D
D	REVISE & REDRAW PER CURRENT STD	12181	06/02/1999	TL/

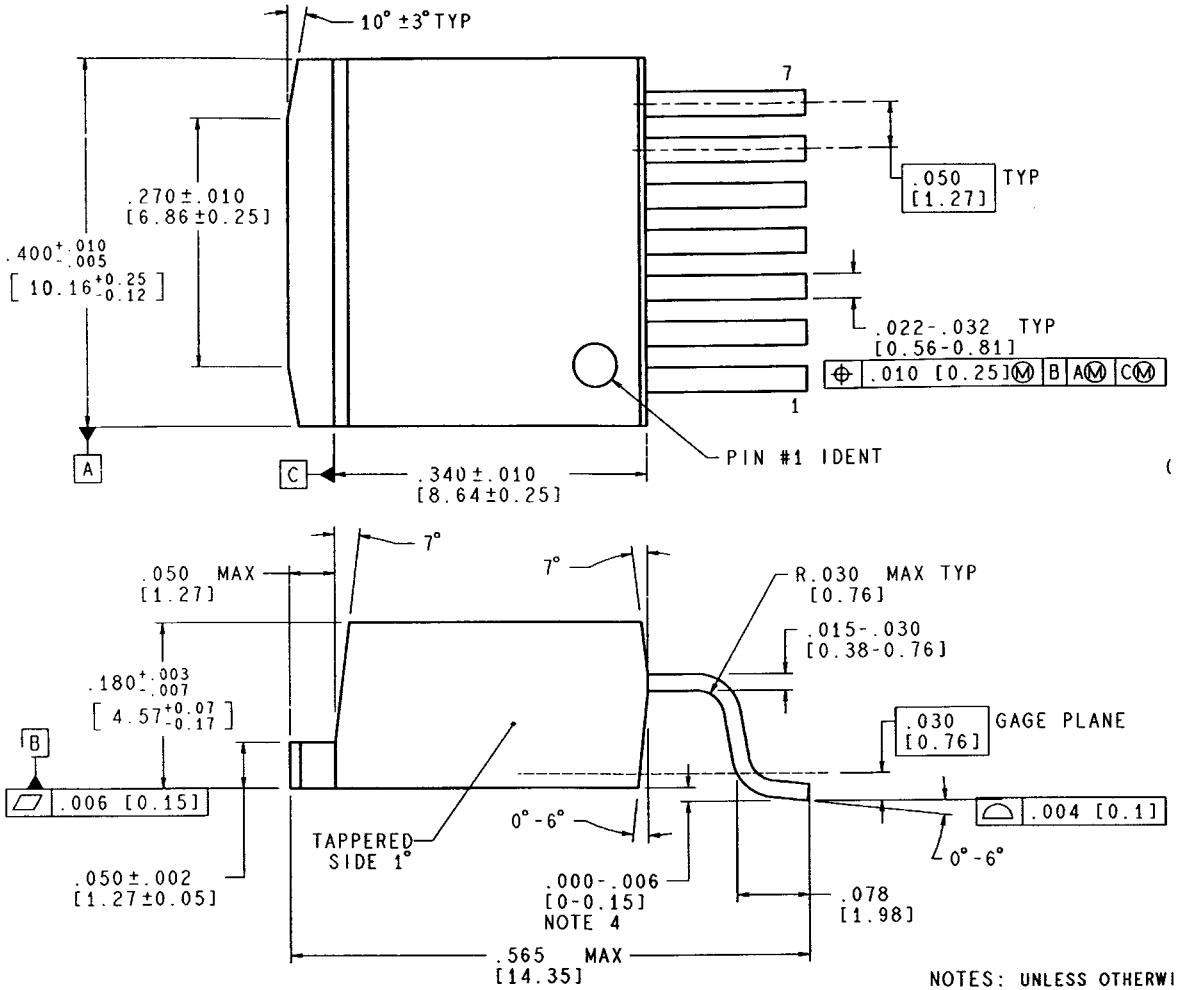

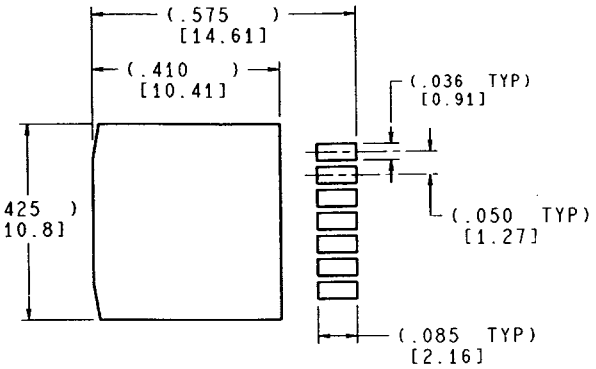

LAND PATTERN RECOMMENDATION
SCALE:5X

CONTROLLING DIMENSION IS INCH
VALUES IN [ ] ARE MILLIMETERS

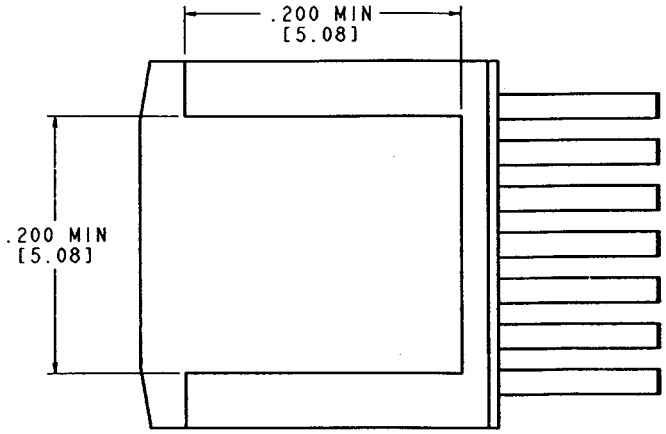

NOTES: UNLESS OTHERWISE SPECIFIED

1. STANDARD LEAD FINISH:
   200 MICROINCHES/ 5.08 MICROMETERS MINIMUM LEAD/TIN
   15/85 ON OLIN 194 COPPER OR EQUIVALENT.
2. MAXIMUM VERTICAL BURR ON HEATSINK NOT TO EXCEED .003 IN/ 0.08 mm.
3. NO PACKAGE CHIPS, CRACKS OR SURFACE INDENTATION ALLOWED AFTER FORMING.
4. UNDER ALL CONDITIONS, LEADS MUST NOT BE ABOVE DATUM -B-.
5. REFERENCE JEDEC REGISTRATION MO-169, VARIATION AC, DATED MARCH 1994.

APPROVALS	DATE
DRAWN T. LEQUANG	06/02/1999
DFTG. CHK.	06/02/1999
ENGR. CHK.	06/02/1999

National Semiconductor
2900 Semiconductor dr. Santa Clara, CA 95052-8090

TO-263, MOLDED, 7 LEAD, SURFACE MOUNT

PROJECTION INCH [MM]

SCALE	SIZE	DRAWING NUMBER	REV
N/A	C	(SC)MKT-TS7B	D

DO NOT SCALE DRAWING — SHEET 1 of 1